宁波新三和连接电气有限公司

NINGBO NEW SANHE ELECTRIC CONTACT CO., LTD.

产品规格书
THE SPEC SHEET

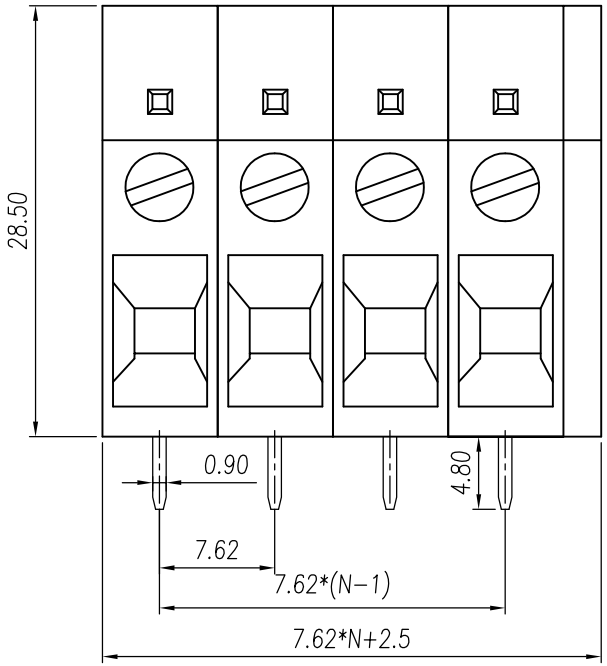

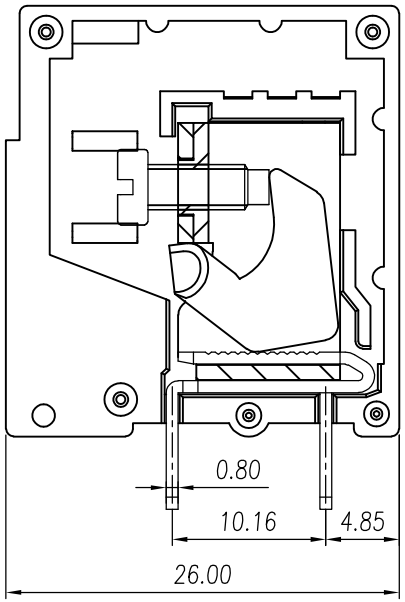

Standard	UL
Rated voltage	300V
Rated current	10A
Contact resistance	20mΩ
Insulation resistance	500MΩ/DC500V
Wrth standing voltage	AC 2000V/1 Min
Wire range	24~10AWG
Standard	IEC
Rated voltage	320V
Rated current	15A
Wire range	4.0mm²
Temp.Range	-40°C~+105°C
MAX Soidering	+250°C for 5 Sec
Torque	0.6Nm
Steip Length	11-12mm
Pitch	7.62mm
Poles	More than 1P

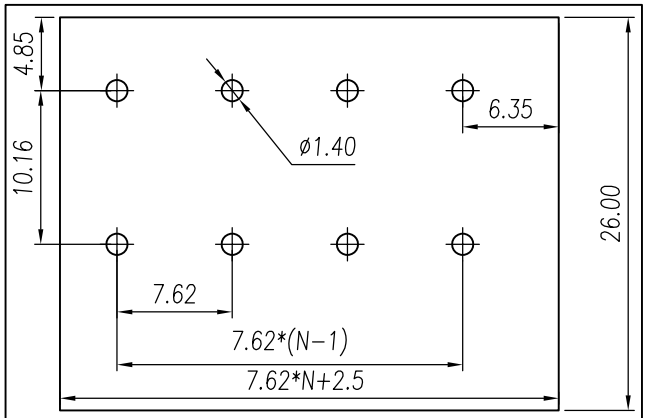

P.C.B 开孔图

	linear dimension							≡	—	▱	//	⊥
variable range	to 10	over 18 to 30	over 30 to 50	over 50 to 80	over 80 to 120	over 120 to 160	over 160 to 200	all	to 5	over 5 to 30	over 30 to 120	over 120 to
tolerance	±0.15	±0.25	±0.35	±0.45	±0.60	±0.75	±0.90	0.5	0.025	0.06	0.12	0.4

产品名称 Product Name	SH160R-7.62			
图纸比例 Draging Scale	2:1	A4	视 图 Project View	(mm)

宁波新三和连接电气有限公司
NINGBO NEW SANHE ELECTRIC CONTACT CO., LTD.
中国宁波慈溪
TEL:+86(574)63226910
FAX:+86(574)63226900