宁波新三和连接电气有限公司

NINGBO NEW SANHE ELECTRIC CONTACT CO., LTD.

产品规格书
THE SPEC SHEET

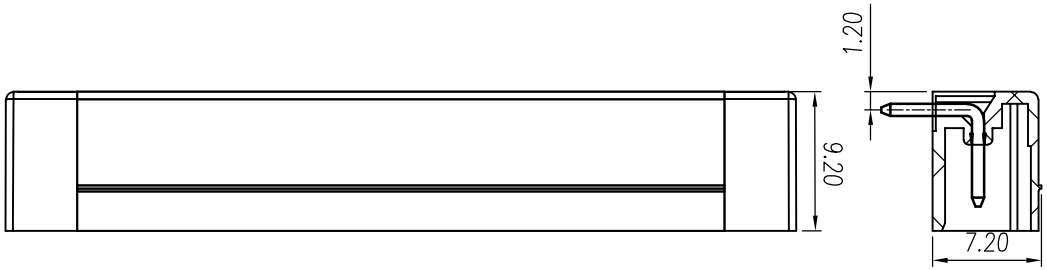

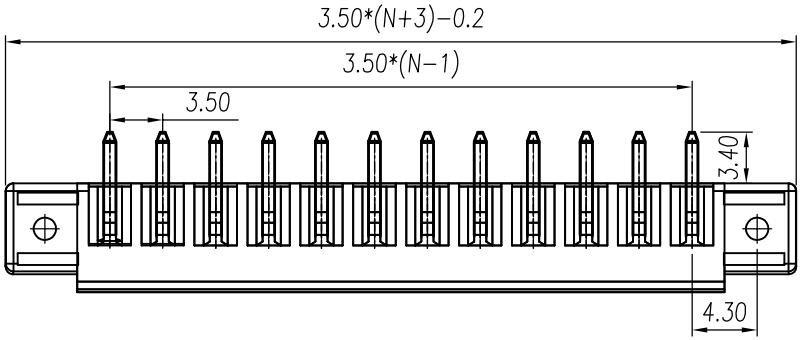

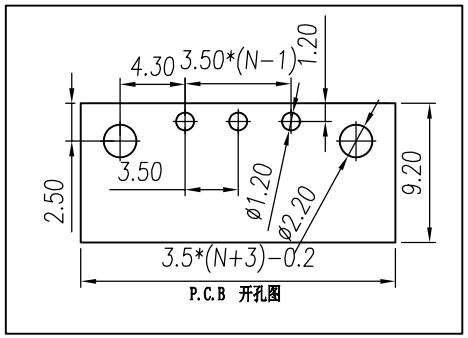

P.C.B 开孔图

Standard UL

Rated voltage	300V
Rated current	7A
Contact resistance	20mΩ
Insulation resistance	500MΩ/DC500V
Wrth standing voltage	AC 2000V/1 Min

Standard IEC

Rated voltage	250V
Rated current	8A
Temp.Range	-40°C~+105°C
MAX Soidering	+250°C for 5 Sec
Pitch	3.5mm
Poles	2-24p

	linear dimension							≡	—	▱	//	⊥
variable range	to 10	over 18 to 30	over 30 to 50	over 50 to 80	over 80 to 120	over 120 to 160	over 160 to 200	all	to 5	over 5 to 30	over 30 to 120	over 120 to
tolerance	±0.15	±0.25	±0.35	±0.45	±0.60	±0.75	±0.90	0.5	0.025	0.06	0.12	0.4

产品名称 Product Name	SH220RM-3.5			
图纸比例 Drawing Scale	2:1	A4	视 图 Project View	(mm)

宁波新三和连接电气有限公司
NINGBO NEW SANHE ELECTRIC CONTACT CO., LTD.
中国宁波慈溪
TEL:+86(574)63226910
FAX:+86(574)63226900